ITEM NO.	PART NUMBER
1	VT-4SIDE-670-INNER-ADJUSTMENT-SLIDER
2	EB-80&85
3	PTS-UCM-V3
4	CM-328-SLIDER-COMBINE BRACKET
5	LC-18-4CH-RGBW-A1
6	24V POWER SUPPLY
7	LSW2-00-100-2-RGBW-24V
8	WHITE BASE PLATE (400MMX540MMX15MM)
9	EXTENSION PLUG

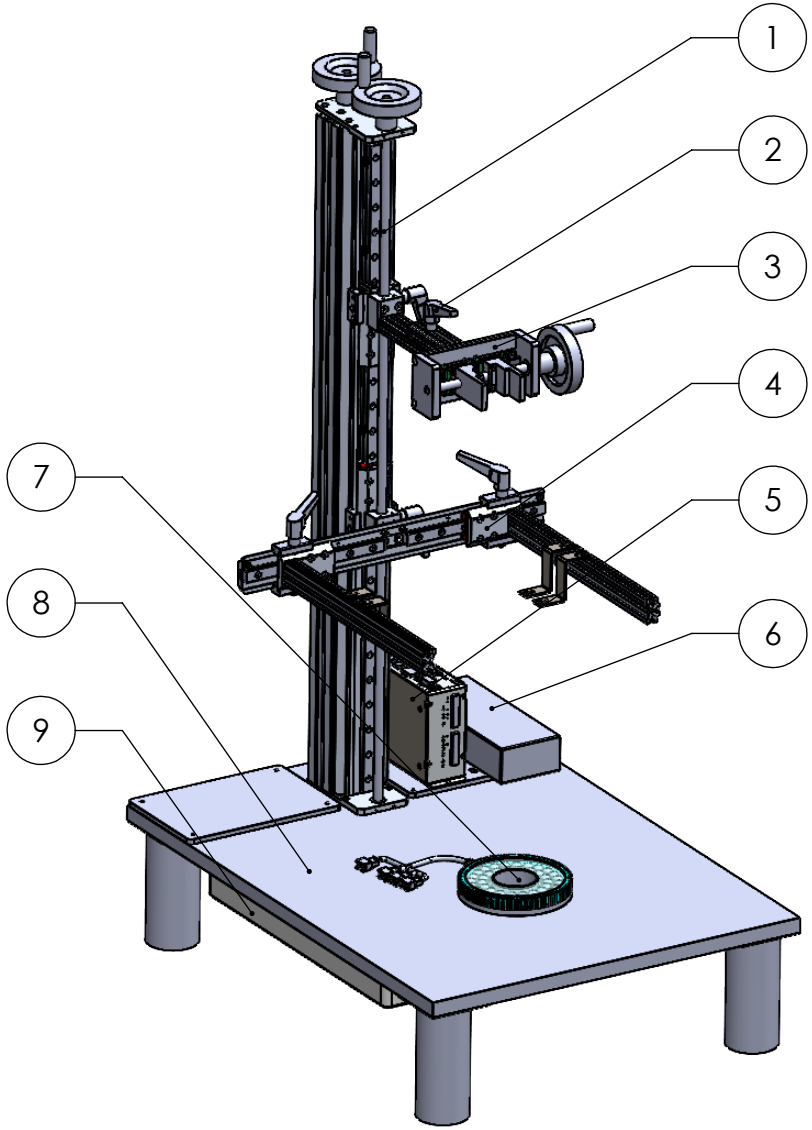

TMS LITE SDN. BHD. (Co. No. 671971V)
LED ILLUMINATION SOLUTION PARTNER

DESIGN BY	KANG	UNIT: MM	PRODUCT SERIES: PTS3 SERIES
CHECK BY	KANG		
DATE	15/11/2022	REVISION: 01	TITLE: EXPLODED LAYOUT
MATERIAL	-		
FINISHING	-	SCALE: 1 : 1	PART NO: PTS3-V-U-AJM-UCM-LSW2-RGBW-LC-18
QTY	-		DWG NO: - SHEET 1 OF 1